BENITO –Urban

Kube
PA672

pittman traffic & safety equipment
sales@pittmantraffic.com
(01) 531 2111

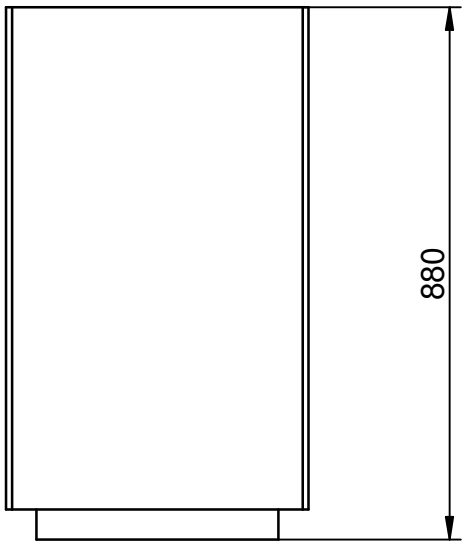

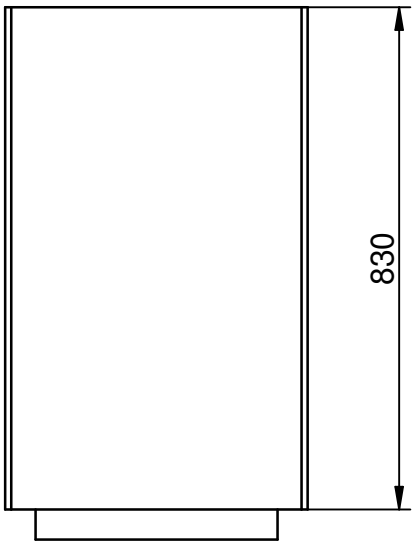

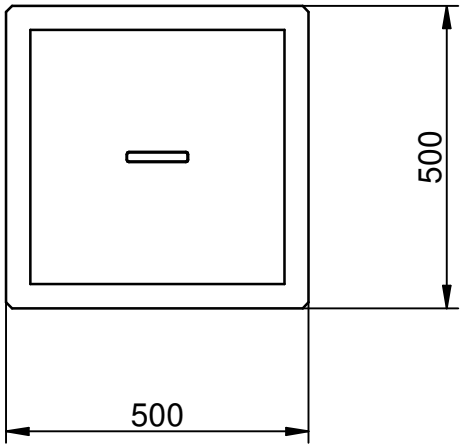

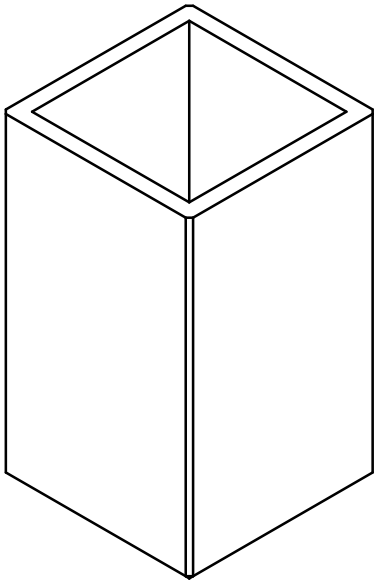

V5 15/01/2014

Kube
PA672S

pittman traffic & safety equipment
sales@pittmantraffic.com
(01) 531 2111

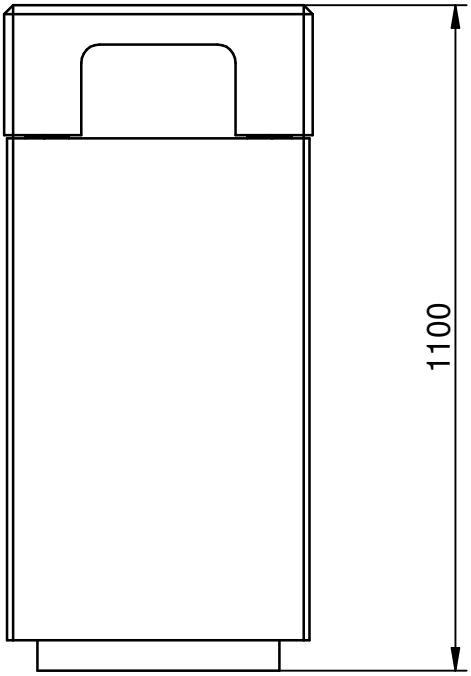

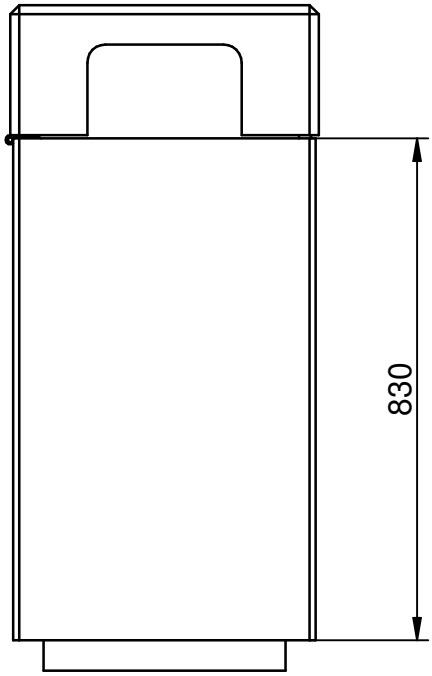

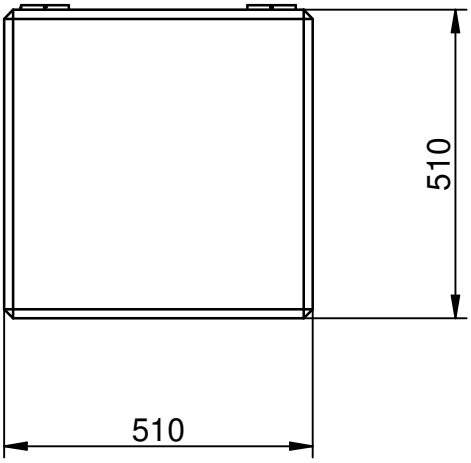

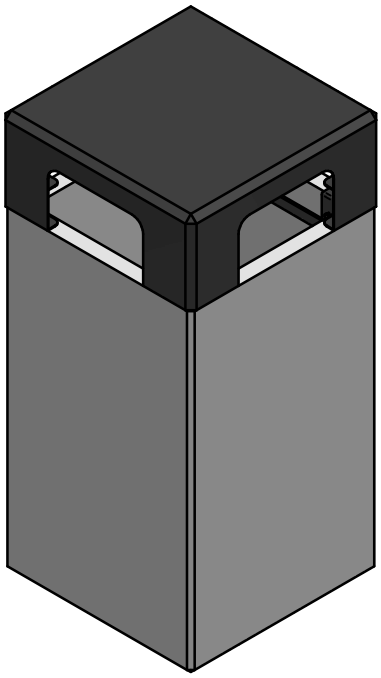

V5 15/01/2014

BENITO –Urban

Nin
PA673

pittman traffic & safety equipment
sales@pittmantraffic.com
(01) 531 2111

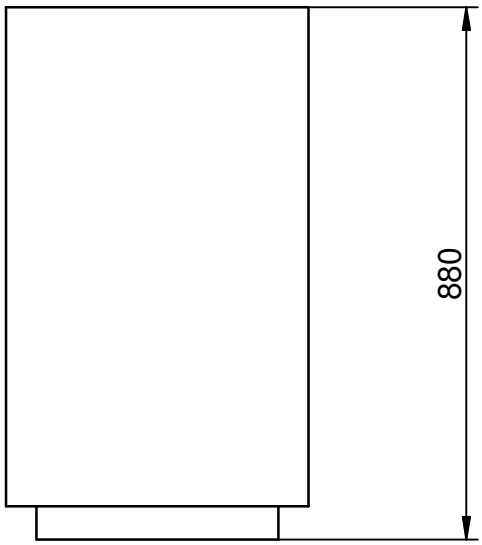

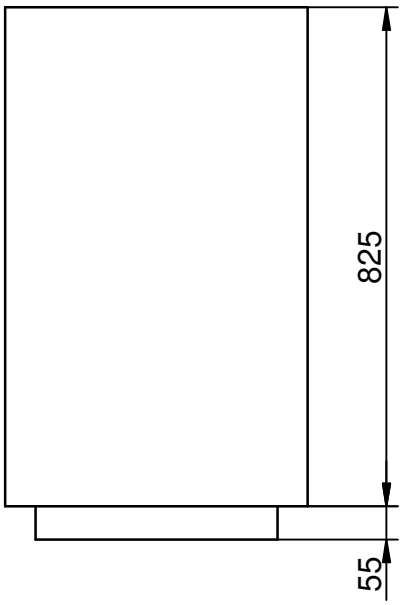

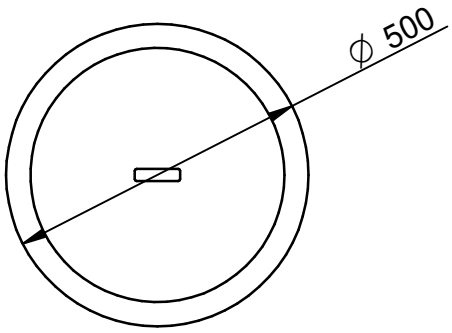

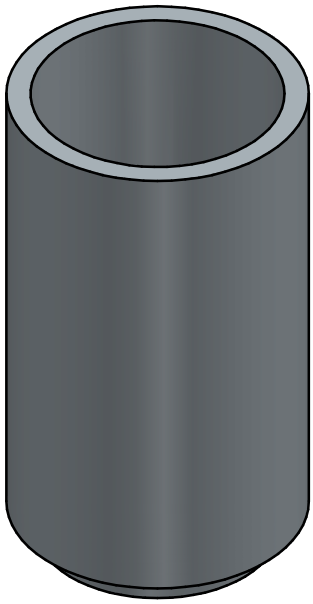

V 1 25/02/2021