pittman traffic & safety equipment
sales@pittmantraffic.com
(01) 531 2111

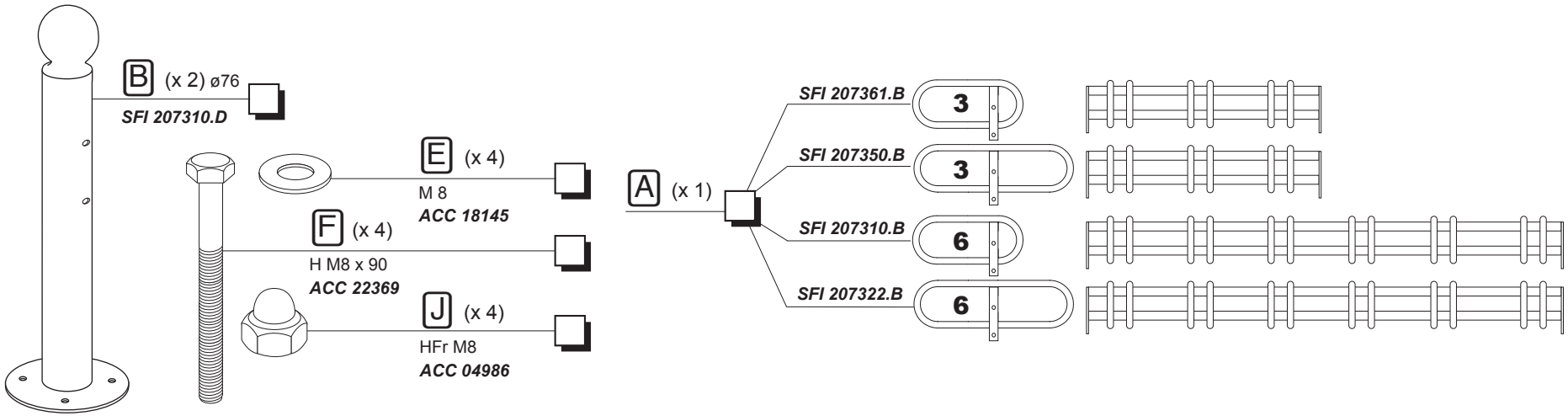

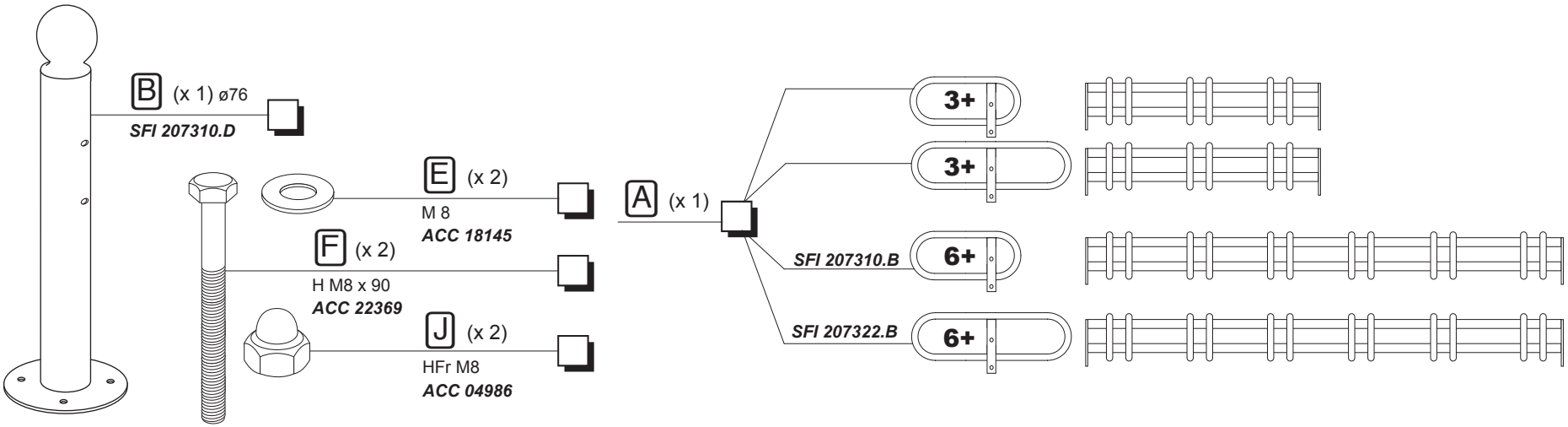

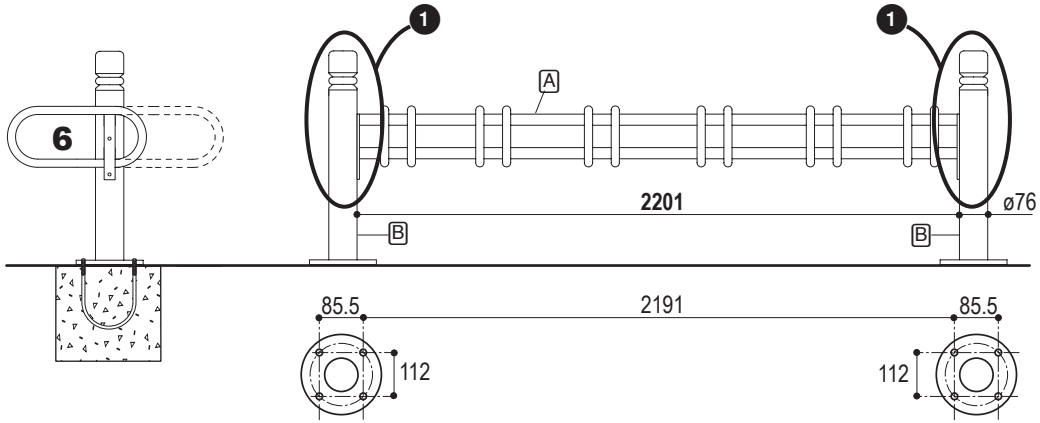
6
1
1
A
2201
ø76
B
B
85.5
2191
85.5
112
112

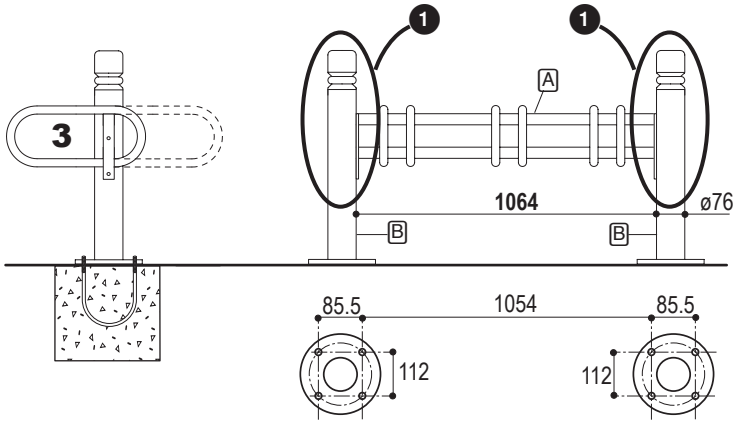
3
1
1
A
1064
ø76
B
B
85.5
1054
85.5
112
112

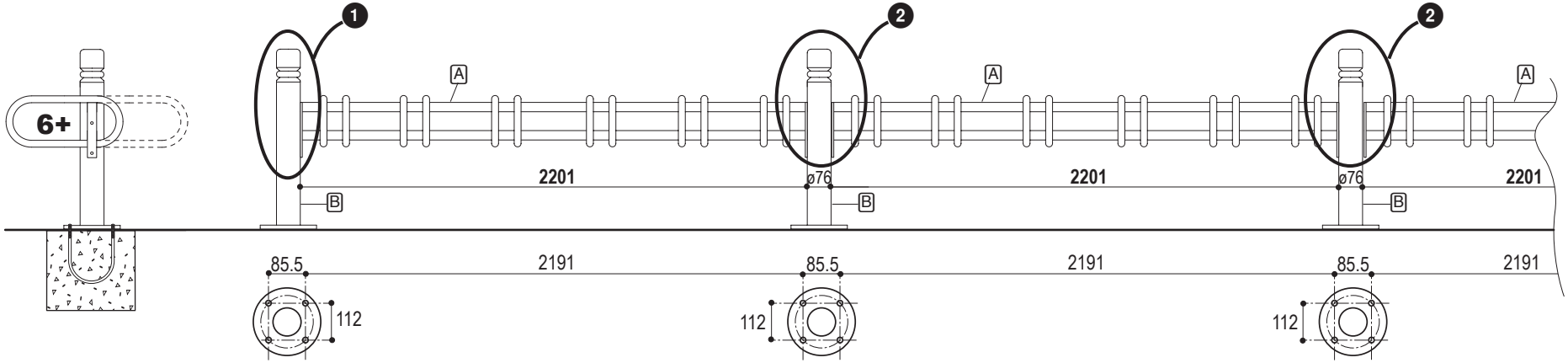
6+
1
2
2
A
A
A
2201
ø76
2201
ø76
2201
B
B
B
85.5
2191
85.5
2191
85.5
2191
112
112
112

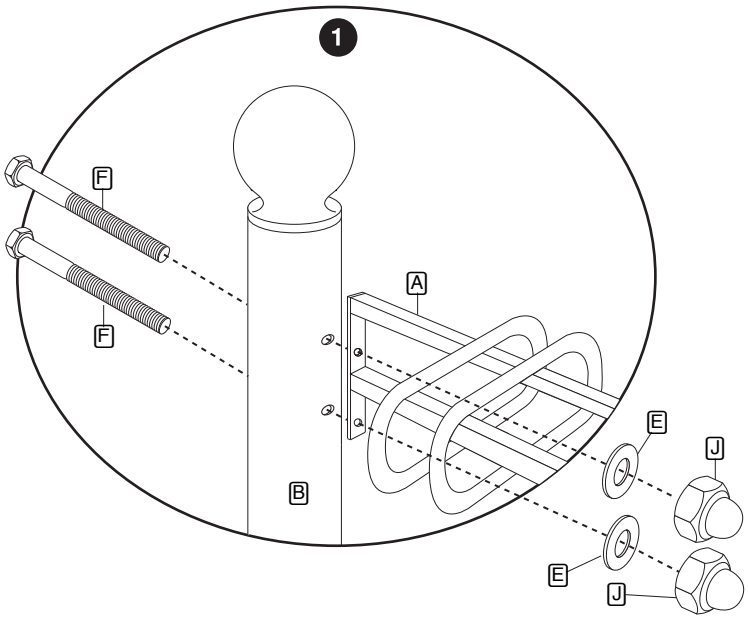
1
F
F
A
B
E
J
E
J

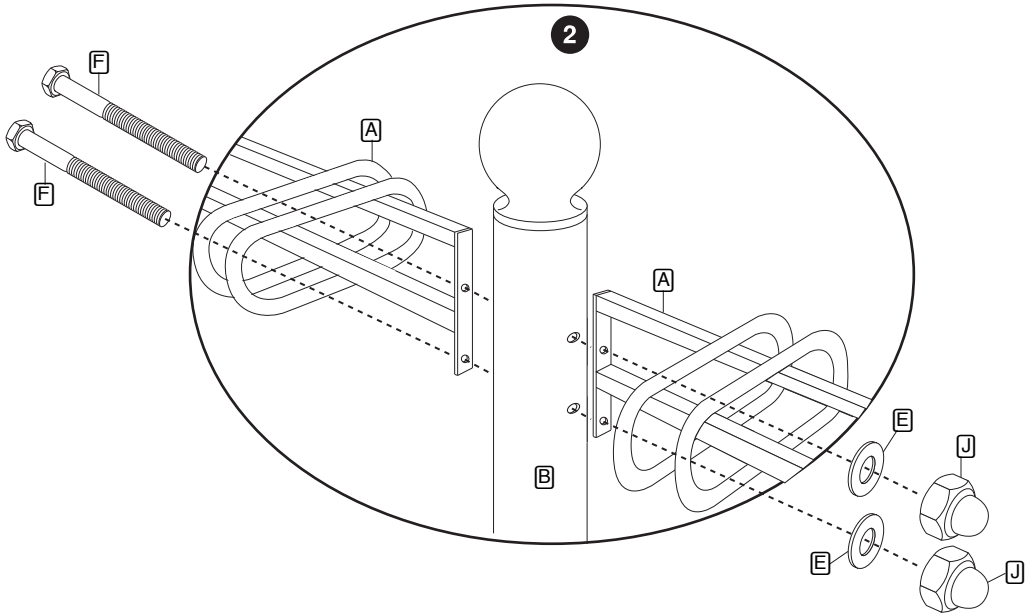
2
F
F
A
A
B
E
J
E
J